Summary in Graph

Exam Summary (GO Classes CS | Digital Logic | Combinational Circuits, Number System | Weekly Quiz 5)

Qs. Attempted:	0 (0 + 0)	Correct Marks:	0 (0 + 0)
Correct Attempts:	0 (0 + 0)	Penalty Marks:	0 (0 + 0)
Incorrect Attempts:	0 (0 + 0)	Resultant Marks:	0 (0 + 0)

Total Questions:	15 (5 + 10)
Total Marks:	25 (5 + 20)
Exam Duration:	45 Minutes
Time Taken:	0 Minutes

Individual Question Statistics

Select Metric: Marks Obtained

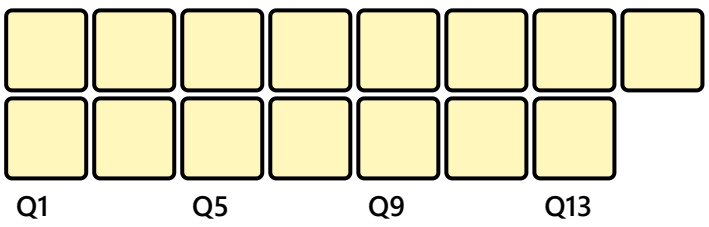

* Average Stats based on first-attempt stats of Top 10% (23) out of 232 users

EXAM RESPONSE EXAM STATS FEEDBACK

Technical

Q #1 Multiple Choice Type Award: 1 Penalty: 0.33 Digital Logic

P, Q, and R are the decimal integers corresponding to the 4-bit binary number 1100 considered in signed magnitude, 1's complement, and 2's complement representations, respectively. The 6-bit 2's complement representation of $(P+Q+R)$ is _____.

A. 110101
B. 110010

C. 111101
D. 111001

Your Answer: | Correct Answer: A | Not Attempted | Time taken: 00min 00sec | Discuss

Q #2 | Multiple Select Type | Award: 1 | Penalty: 0 | Digital Logic

Any set of Boolean operators that is sufficient to represent all Boolean expressions is said to be complete. Which of the following is not complete?

A. $\{\text{NOT, OR}\}$
B. $\{\text{NOR}\}$
C. $\{\text{AND, OR}\}$
D. $\{\text{AND, NOT}\}$

Your Answer: | Correct Answer: C | Not Attempted | Time taken: 00min 00sec | Discuss

Q #3 | Multiple Select Type | Award: 1 | Penalty: 0 | Digital Logic

Q, R, S are Boolean variables and $\oplus$ is the XOR operator. Select the CORRECT option(s).

A. $(Q \oplus R) \oplus S = Q \oplus (R \oplus S)$
B. $(Q \oplus R) \oplus S = 0$ when any two of the Boolean variables (Q, R, S) are 0 and the third variable is 1.
C. $(Q \oplus R) \oplus S = 1$ when $Q = R = S = 1$
D. $((Q \oplus R) \oplus (R \oplus S)) \oplus (Q \oplus S) = 1$

Your Answer: | Correct Answer: A;C | Not Attempted | Time taken: 00min 00sec | Discuss

Q #4 | Multiple Choice Type | Award: 1 | Penalty: 0.33 | Digital Logic

Input bits X and Y are added by using the combinational logic as shown below. S represents the sum of the two bits. For a correct implementation of the sum, the signals $\mathrm{D}_0, \mathrm{D}_1, \mathrm{D}_2, \mathrm{D}_3$ are, respectively.

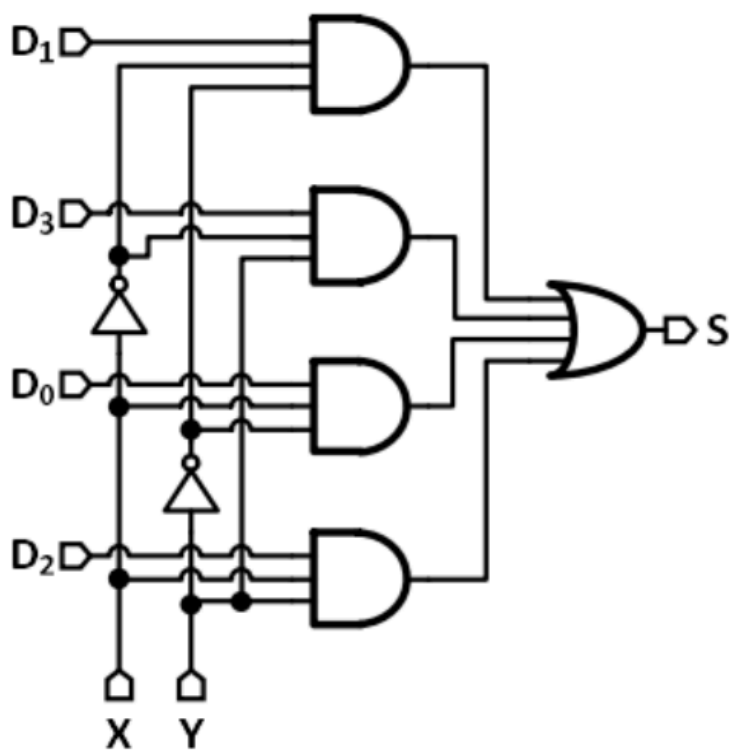

A. $1, 0, 0, 1$
B. $0, 1, 0, 1$
C. $1, 0, 1, 1$

D. $0, 1, 1, 0$

Your Answer: | Correct Answer: A | Not Attempted | Time taken: 00min 00sec | Discuss

Q #5 | Multiple Choice Type | Award: 1 | Penalty: 0.33 | Digital Logic

In the circuit shown below, Y is a 2-bit $(\mathrm{Y}_1\mathrm{Y}_0)$ output of the combinational logic. What is the maximum value of Y for any given digital inputs, $\mathrm{A}_1\mathrm{A}_0$ and $\mathrm{B}_1\mathrm{B}_0$?

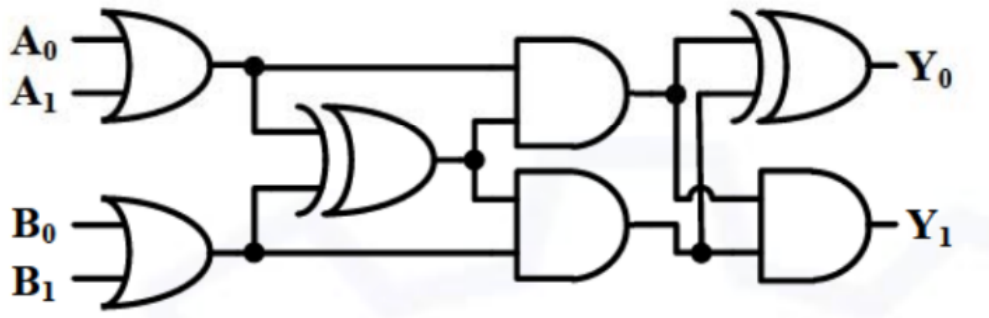

A. 01
B. 10
C. 00
D. 11

Your Answer: | Correct Answer: A | Not Attempted | Time taken: 00min 00sec | Discuss

Q #6 | Multiple Select Type | Award: 2 | Penalty: 0 | Digital Logic

For the output F to be 1 in the logic circuit shown, the input combination should be

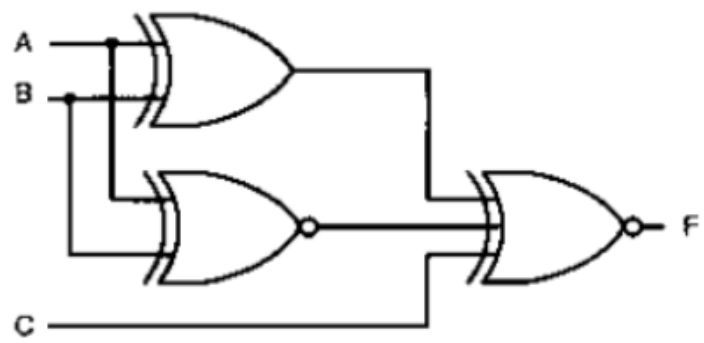

A. $\mathrm{A} = 1,\ \mathrm{B} = 1, \mathrm{C} = 0$
B. $\mathrm{A} = 1, \mathrm{B} = 0, \mathrm{C} = 0$
C. $\mathrm{A} = 0,\ \mathrm{B} = 1, \mathrm{C} = 0$
D. $\mathrm{A} = 0, \mathrm{B} = 0, \mathrm{C} = 1$

Your Answer: | Correct Answer: D | Not Attempted | Time taken: 00min 00sec | Discuss

Q #7 | Multiple Choice Type | Award: 2 | Penalty: 0.67 | Digital Logic

In the sum of products function $f(X, Y, Z) = \sum(2, 3, 4, 5)$, the prime implicants are

A. $\overline{X}Y, X\overline{Y}$
B. $\overline{X}Y, X\overline{Y}\ \overline{Z}, X\overline{Y}Z$
C. $\overline{X}Y\overline{Z}, \overline{X}YZ, X\overline{Y}$
D. $\overline{X}Y\overline{Z}, \overline{X}YZ, X\overline{Y}\ \overline{Z}, X\overline{Y}Z$

Your Answer: | Correct Answer: A | Not Attempted | Time taken: 00min 00sec | Discuss

Q #8 Multiple Choice Type | Award: 2 | Penalty: 0.67 | Digital Logic

A logic circuit implements the boolean function $F = \overline{X} \cdot Y + X \cdot \overline{Y} \cdot \overline{Z}$. It is found that the input combination $X = Y = 1$ can never occur. Taking this into account, a simplified expression for F is given by

A. $\overline{X} + \overline{Y} \cdot \overline{Z}$
B. $X + Z$
C. $X + Y$
D. $Y + X \cdot \overline{Z}$

Your Answer: | Correct Answer: D | Not Attempted | Time taken: 00min 00sec | Discuss

Q #9 Multiple Choice Type | Award: 2 | Penalty: 0.67 | Digital Logic

Let $X = X_1X_0$ and $Y = Y_1Y_0$ be unsigned 2-bit numbers. The function $F = 1$ if $X > Y$ and $F = 0$ otherwise. The minimized sum of products expression for F is _____.

A. $Y_1 \cdot Y_0 + X_0 \cdot Y_0 + \overline{X}_1 \cdot \overline{X}_0 \cdot \overline{Y}_1$
B. $X_0 \cdot \overline{Y}_1 + Y_1 \cdot \overline{Y}_0 + X_1 \cdot \overline{X}_0$
C. $Y_1 \cdot \overline{X}_1 + Y_0 \cdot \overline{X}_1 \cdot \overline{X}_0 + Y_1 \cdot Y_0 \cdot \overline{X}_0$
D. $X_1 \cdot \overline{Y}_1 + X_0 \cdot \overline{Y}_0 \cdot \overline{Y}_1 + X_0 \cdot X_1 \cdot \overline{Y}_0$

Your Answer: | Correct Answer: D | Not Attempted | Time taken: 00min 00sec | Discuss

Q #10 Multiple Choice Type | Award: 2 | Penalty: 0.67 | Digital Logic

A MUX circuit shown in the figure below implements a logic function F_1.

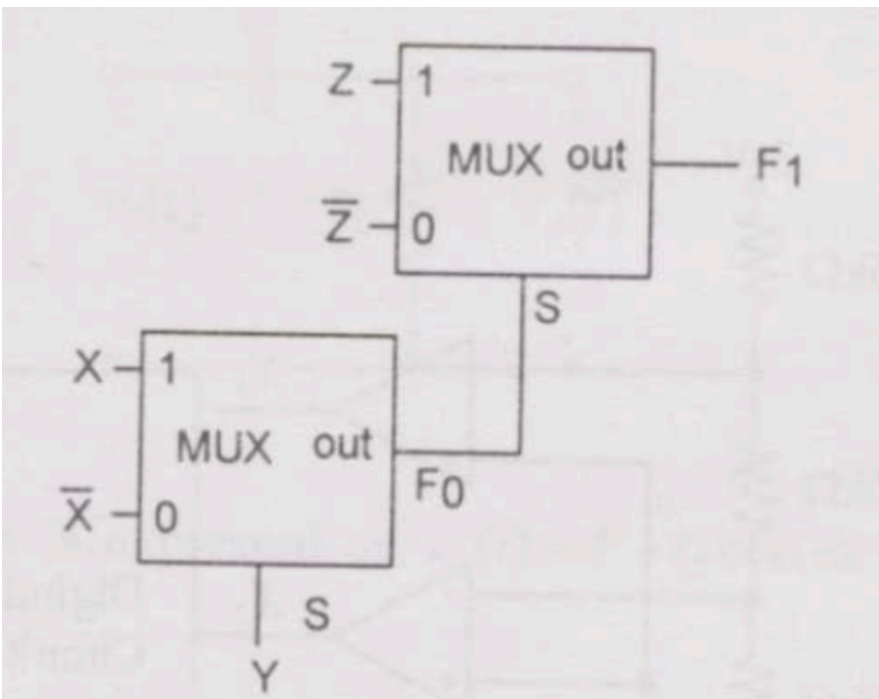

The correct expression for F_1 is ____.

A. $(\overline{X \oplus Y}) \oplus Z$

B. $\overline{(\overline{X \oplus Y}) \oplus Z}$

C. $(X \oplus Y) \oplus \overline{Z}$

D. $(X \oplus Y) + Z$

Your Answer: | Correct Answer: B | Not Attempted | Time taken: 00min 00sec | Discuss

Q #11 Multiple Choice Type | Award: 2 | Penalty: 0.67 | Digital Logic

A universal logic gate can implement any Boolean function by connecting sufficient number of them appropriately. Three gates are shown.

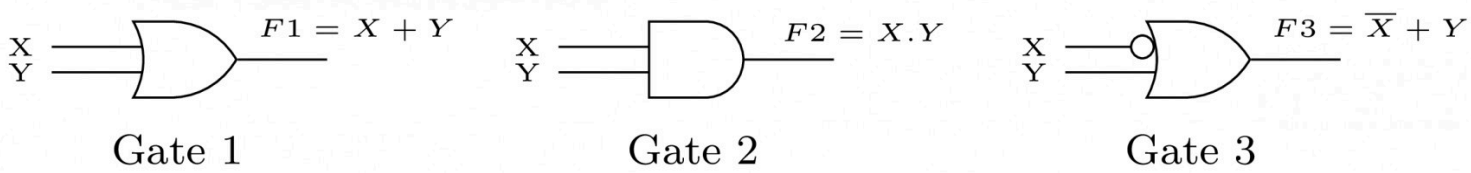

Which one of the following statements is TRUE?

A. Gate 1 is a universal gate
B. Gate 2 is a universal gate
C. Gate 3 is a universal gate
D. None of the gates shown is a universal gate

Your Answer: | Correct Answer: C | Not Attempted | Time taken: 00min 02sec | Discuss

Q #12 Multiple Select Type | Award: 2 | Penalty: 0 | Digital Logic

Consider a Boolean gate (D) where the output Y is related to the inputs A and B as, $Y = A + \overline{B}$, where $+$ denotes logical OR operation. The Boolean inputs $'0'$ and $'1'$ are also available separately. Using instances of only D gates and inputs $'0'$ and $'1'$, _____ (select the correct option(s)).

A. NAND logic can be implemented
B. OR logic cannot be implemented
C. NOR logic can be implemented
D. AND logic cannot be implemented

Your Answer: | Correct Answer: A;C | Not Attempted | Time taken: 00min 00sec | Discuss

Q #13 Multiple Select Type | Award: 2 | Penalty: 0 | Digital Logic

All digital circuits can be realized using only

A. XOR gates
B. Multiplexers
C. Half adders
D. OR gates

Your Answer: | Correct Answer: B;C | Not Attempted | Time taken: 00min 00sec | Discuss

Q #14 Multiple Select Type | Award: 2 | Penalty: 0 | Digital Logic

Which of the following sets of component(s) is/are sufficient to implement any arbitrary Boolean function?

A. XOR gates, NOT gates

B. 2 to 1 multiplexers

C. AND gates, XOR gates

D. Three-input gates that output $(A.B)+C$ for the inputs A, B, and C.

Your Answer: | Correct Answer: B;C | Not Attempted | Time taken: 00min 00sec | Discuss

Q #15 | Multiple Select Type | Award: 2 | Penalty: 0 | Digital Logic

This question is about the concept of functional completeness. A set of Boolean gates is said to be functionally complete if any Boolean function can be implemented by a circuit consisting of only these gates (and perhaps the constants 0 and 1). For example, the NAND $(out=\overline{in1\cdot in2})$ and NOR $(out=\overline{in1+in2})$ gates are functionally complete. This is because any Boolean circuit can be implemented using AND, OR and NOT gates, and NAND (respectively, NOR) gates can be used to implement the functionality of AND, OR and NOT gates. For example, using NAND gates, we can implement a NOT gate as out $=\overline{in\cdot in}$, an OR gate as out $=\overline{\overline{in1\cdot in1}\cdot\overline{in2\cdot in2}}$.

Which of the following sets of Boolean gates is/are functionally complete?

A. Three-input gates that output $\mathrm{A}'+\mathrm{BC}'$ for the inputs A,B and C.
B. $\mathrm{XOR}(\text{ out }=in1\cdot\overline{in2}+in2\cdot\overline{in2}$ gates.
C. Three-input gates that output $\mathrm{A}'\mathrm{B}+\mathrm{B}'\mathrm{C}$ for the inputs A,B and C.
D. Three-input gates that output $A'+BC$ for the inputs A, B and C.

Your Answer: | Correct Answer: A;C;D | Not Attempted | Time taken: 00min 00sec | Discuss

Copyright & Stuff